WISENMESHNET® L-Series Omni Tilt Sensor Node

User Manual

Wuxi Wisen Innovation Co., Ltd.

November 2019

Revision History and Clarification

Rev.	Issue Date	Revisions	Written By	Revised By
V1.0	01/11/2019	1st Issue	Xiaoyan Huang	Dr. Yan Wu

Document Definition:

It defines the specifications (i.e., introduction, technical features, deployment and maintenance methods) of the WISENMESHNET® Omni Tilt Sensor Node, which is one of the key components in WISENMESHNET® Low Power, Intelligent, Wireless Sensor Network (WSN) system. It is responsible to:

- Sample data from its internal tilt angle detection sensor;
- Form a time-synchronized Wireless Sensor Network with others nodes in the system;
- Transmit the data packet to a gateway.

Scope：

Customer Site Project Managers and Engineers, Wisen Service Engineers, etc.

Table of Contents

1. Product Introduction ..... - 4 -

2. System Structure Layout ..... - 5 -

3. Node & Radio Features ..... - 6 -

4. Terminologies ..... - 8 -

5. Operation Procedures ..... - 9 -

5.1. System Deployment Notifications ..... - 9 -

5.2. Reading Conversion to Structural Tilt Direction ..... - 9 -

5.3. Deployment Procedures ..... - 10 -

5.4. Mounting Options ..... - 10 -

6. General Maintenance and Notification ..... - 10 -

7. Package and Accessories ..... - 11 -

8. Safety and Warning ..... - 12 -

9. Contact ..... - 13 -

1. Product Introduction

The WISENMESHNET® Omni Tilt Sensor Node is one of the key products in our patented WISENMESHNET® geotechnical safety monitoring system. Working together with the WISENMESHNET® gateway product and node products, it intelligently delivers the real-time tilt deformation of a structure to the information centre.

The WISENMESHNET® Omni Tilt Sensor Node operates using our core technology, i.e., the WISENMESHNET® Low Power, Intelligent, Wireless Sensor Network protocol, together with its internal high precision MEMS Omni tilt sensing module and power unit. This product satisfies the three fundamental identities of the system:

A. Network Life Span: to maximise battery life across the mesh network as a whole;

B. Network Data Arrival Rate: to minimise data packet loss;

C. Single Node Environmental Coverage: to maximise radio coverage.

Our product has IP66 and is designed to work in a tough environment. It is small in size, reliable in performance, easy for maintenance, has high precision during sampling, and has strong immunity to radio-interference.

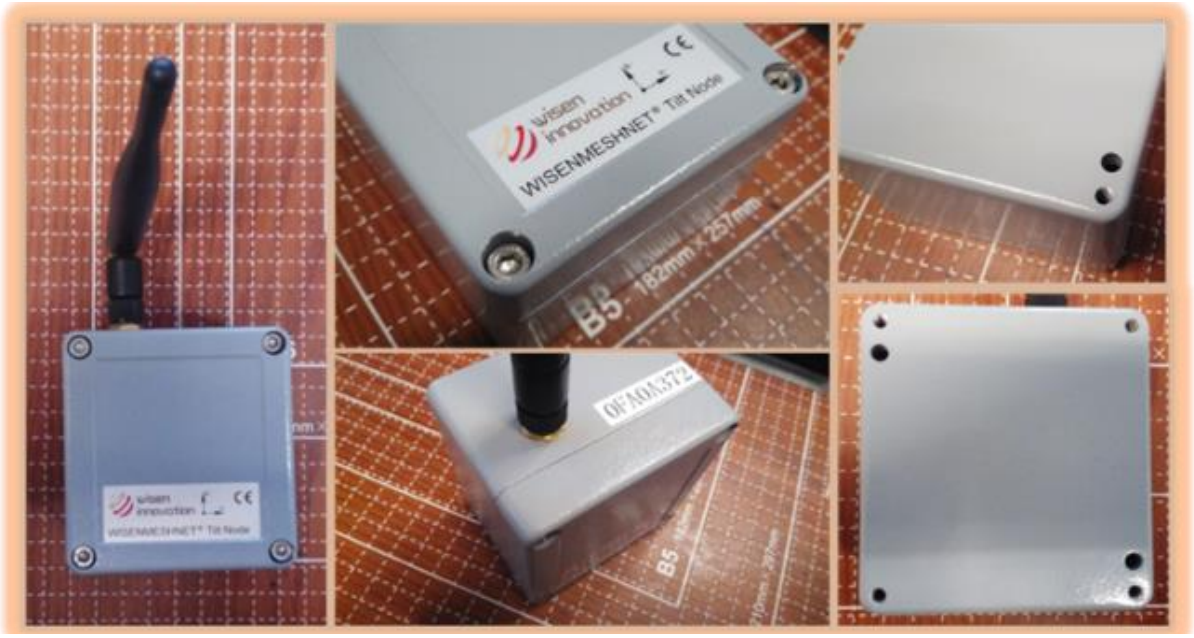

Figure 1. Tilt Node Overview in Photos.

WISENMESHNET® Omni Tilt Sensor Node is often used in infrastructure tilting condition monitoring, such as retaining wall, supporting column, river embankment, land sliding and railway track monitoring.

2. System Structure Layout

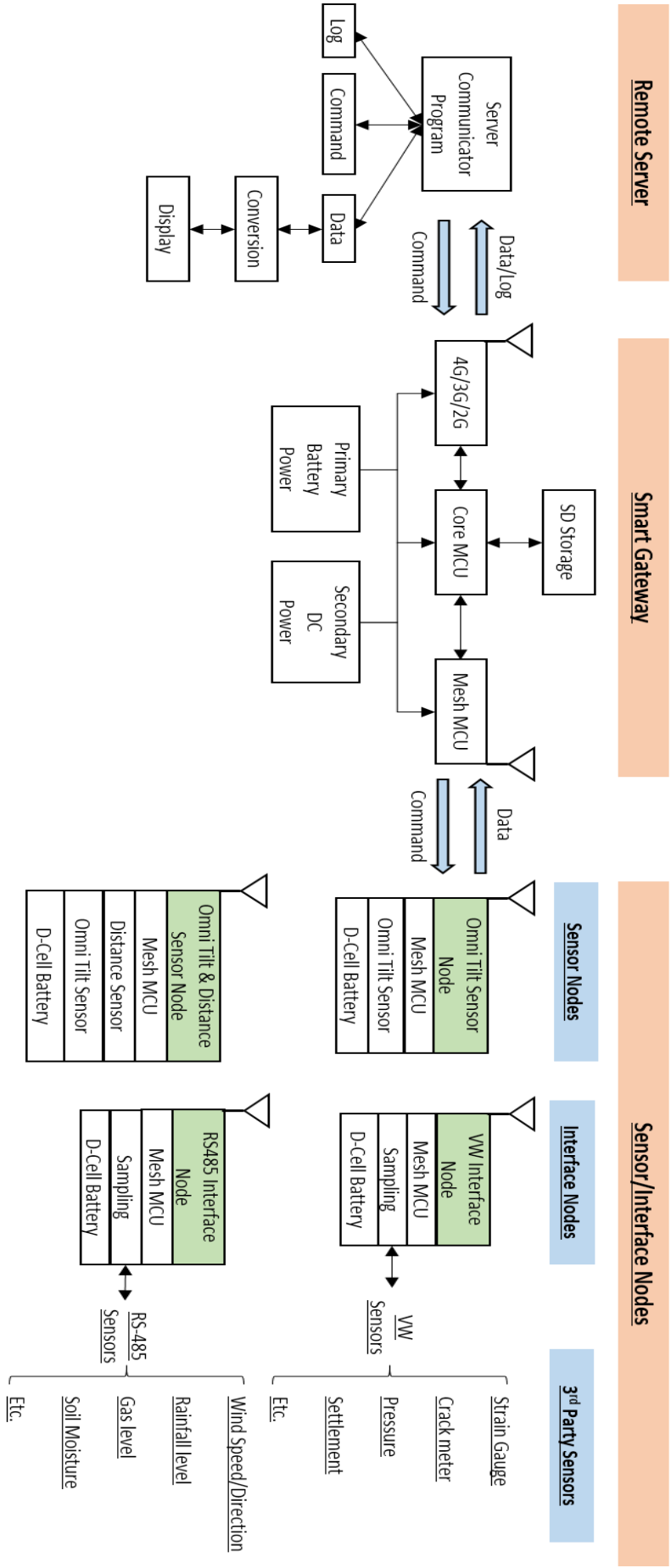

Figure 2. System Structure Layout.

3. Node & Radio Features

Node Features:

Basics	
Battery Power	Qty. x 1 (3.6V Lithium primary D-Cell ER34615)
Accuracy Stop Voltage	2.7VDC
Mesh Stop Voltage	2.1VDC
Battery Connection	Standard Aluminium Battery Holder
Working Current (DC)	Max. 65mA (Typ. 50mA)
Local Storage	Min. 450 Messages during Meshing
L x W x H	80 x 75 x 57mm
Weight	0.43kg
Primary Sensor	
Sensor Type	X-axis; Y-axis; Z-axis Tilt Values
Range	-90° to +90°
Accuracy	better than 0.01° (36” or 0.1745mm/m) over 1°
Resolution	0.001° (3.6” or 0.01745mm/m)
Standard System Parameter	
Temperature	Range: -40 to 85°C; Accuracy: +/-1°C, typical 0.5°C; Resolution: 0.1°C
Voltage	Accuracy: +/- 0.1V
WSN Interface	
WSN Protocol	WISENMESHNET® Protocol
Industrial Standard	
Casing and Painting Materials	Aluminium-Alloy Die Castings 12 (Epoxy Polyester Powder Coating)
IP Rating	>= IP66
Operating Temperature	-40 to 85°C
Fire Proof	Approved
Re-Calibration Method	
Inspection Period	Every 3 Years by Manufacturer (or inspected by arranged methods)

Radio Features:

	FCC 915MHz System	**CE 868MHz System**

Radio Band	902-928MHz	865-868MHz
Central Frequency (**Default**)	**905**/910/915/920/925MHz	**865.75**/866.25/866.75/867.25MHz
Default Transmit Power	18dBm	14dBm
Receive Sensitivity	-112dBm	
Bandwidth	500kHz	
Transmission Speed	19.2kb/s	
No. of Mesh Hop* Supported	6 Hops	
Sampling Interval	1-60mins	
Antenna Description	Mesh Antenna	Omni-directional (20cm in length) or Customised
	2/3/4G-Antenna	Omni-directional 3.5dBi (20cm in length) or Customised
	Antenna Connector	SMA (M)

* E.g., the radio link from a gateway to the 1st layer node is called the 1st hop.

4. Terminologies

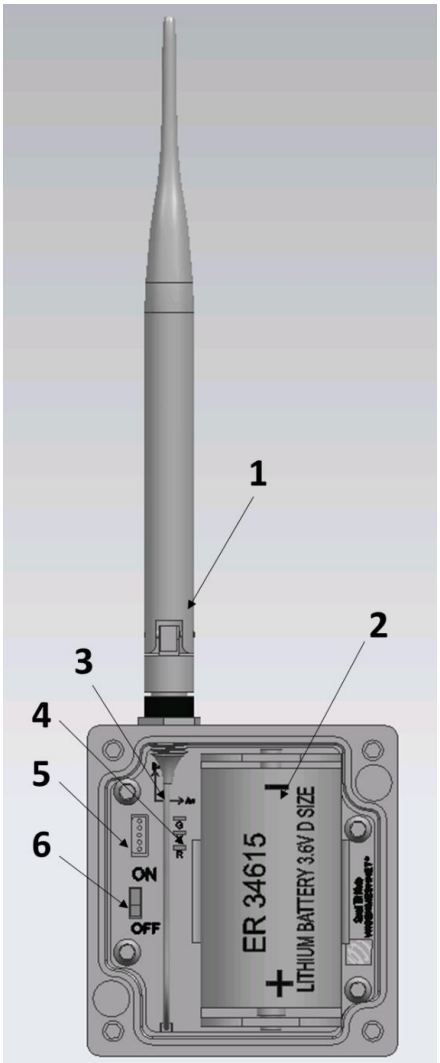

Figure 3. Omni Tilt Sensor Node Internal Configuration Terminologies, where:

No.	Terminology
1	Mesh Antenna
2	ER34615 3.6V Lithium primary D Cell Battery
3	Coaxial Cable
4	Mesh LEDs (R/Y/G)
5	Mesh Program Port
6	On/Off Switch

5. Operation Procedures

5.1. System Deployment Notifications

1) Location: The deployment location of a Omni Tilt Sensor Node is usually determined by the desired monitoring or inspection location;
2) Before any Omni Tilt Sensor Node is switched on, a gateway must be deployed, powered on and proven to be working properly. Otherwise, the nodes will need to be switched off and on again after a gateway is switched on. So simply speaking, the rules to follow when deploying and turning on a WISENMESHNET system are:

   Gateway first, then nearby nodes, then further nodes.
3) All the Omni Tilt Sensor Node should ideally face to the same direction, and clear notes must be taken so that the tilt direction of a monitored structure can be correctly interpreted;
4) The Omni Tilt Sensor Nodes must be oriented with any two axis marked on the label parallel to the horizontal plane, so that the data can be easily recognized and interpreted;

   Notice: This can be done by two methods, i.e., using a spirit level or using readings from the Node itself.
5) All the Serial Numbers and the orientation of the Omni Tilt Sensor Nodes must be recorded against their site references;
6) All the node should have its antenna point upwards/downwards.

5.2. Reading Conversion to Structural Tilt Direction

When holding the User Manual page horizontally, then when X-axis arrow rotates around 0-dot into the paper plane, the readings of "***x***" decreases.

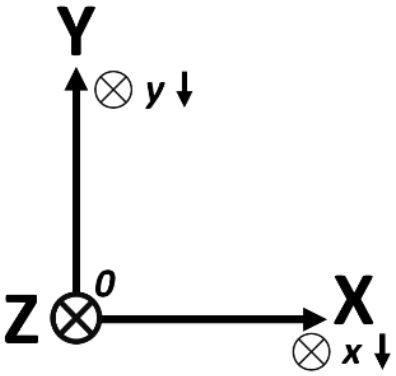

Figure 4. Axis marks on the product label.

5.3. Deployment Procedures

1) Open the box: Take the node out of the package and open its lid;
2) Insert Battery: By default, a node does not contain a D-Cell battery. Therefore the battery needs to be inserted.

   Notice : +ve and –ve orientation must be correct, otherwise, the internal circuit may be damaged;
3) Antenna Installation: Screw the antenna firmly onto the node;
4) Power On: turn the switch to the ON status. After that, you will see: 3 LEDs flashing for 3 times, then green LED on for 1s, then 3 LEDs quickly flashing once, and finally all 3 LEDs are completely turned off to save battery power while a node is running. Switch off the node to save power if the gateway is off;
5) Tighten the 4 Cap-Hex-Head screws of the lid to secure the enclosure IP rating;
6) To validate the sensor data, please visit WISENMESHNET® Visualisation Platform for further details.

5.4. Mounting Options

The node fixings must be rigid for the sensor to measure accurate data. Movement in the fixings will affect the readings.

The Omni Tilt Sensor Nodes must be oriented with any two axis marked on the label parallel to the horizontal plane, so that the data can be easily interpreted.

6. General Maintenance and Notification

1) Once a Tilt Node is installed in the field, please minimise any man-made disturbance so that data quality can be maintained;
2) Radio communication will be impaired if the antenna is covered by metal or very moist soil material;
3) Due to the discharge characteristics of the recommended battery, a battery replacement should be carried out when a node reported voltage reaches 2.7V, at which point you have approximately 3 weeks to change the battery;
4) Our product will use all the possible capacity in a battery down to a stop (minimum) voltage, which has been specified in the Features table. When this occurs, our WISENMESHNET protocol will send you a warning then it will enter a deep sleep mode until a new battery is installed;
5) If the data from nodes are shown unexpected results or are not being sent back to the Wisen gateway, then please

carry out investigation using the following two stage procedure:

A. Remote Inspection of historical data, to identify the following:

a) Whether the heart-beat message has been sent back successfully at each time interval;

b) Whether the battery voltage is too low, if yes, please change the battery unit;

c) Whether the signal strength has become significantly weaker than it was previously. If yes, please check the antenna has been screwed on firmly.

B. On-site Inspection: If all the above are good, please arrange an on-site inspection to check:

a) Whether the Tilt Node has visible external damage;

b) Check the box lid to see if it is firmly tightened;

c) Whether the antenna is bent or damaged and that the node is not blocked by new construction, e.g., hoardings;

d) When it is possible, check that the signal strength is normal by using a spectrum analyser;

e) Open the lid, to see whether the battery is firmly attached to its holder;

f) Use a multi-meter to measure the battery voltage. If it is below the stop (minimum) voltage, replace the battery.

Notices :

i. Case One: If any change has been made from the list above, please inspect the data from the remote server;

ii. Case Two: If all the actions from the list above have not cured the problem, please contact Wisen. We will be happy to help.

7. Package and Accessories

Standard:

No.	Items	Dimension (mm)	Qty.
1	WISENMESHNET® Omni Tilt Sensor Node	100x100x60	1
2	Mesh Antenna	200	1
3	Cap-Hex-Head Screw	M6x14	4
4	User Manual*	Downloadable from WISENMESHNET® Visualisation Platform.	
5	Inspection Report*		

8. Safety and Warning

Warning: Please read the following instructions carefully.

1) Operation Safety

- Before taking any action, please read all the information provided carefully, and keep the guidance documents safe;
- Ensure that any procedures and installations are correctly carried out. The case and any mountings should be grounded where practicable.
- This product has been designed to meet a certain water-proof level. However, it becomes vulnerable to water ingress when the lid is open or if the cable gland has not been sealed properly.

2) Electrical Safety

- To install the battery into a holder, please follow the "+" (positive) and "-" (negative) signs in any Wisen product. Wrong orientation of a battery could potential cause unit damage. Notice: The orientation of battery can vary among products.
- When disconnecting the battery, please take special care not to apply excessive force, otherwise the battery holder and the nearby circuitry may be damaged.

3) Warning

- The battery in the product has a relatively high capacity, so please take special care during storage and usage.
- This product must not be disassembled under any circumstances, to do so will void the warranty and may leave the product in a dangerous state;
- If all the above are not followed, the manufacturer cannot be held responsible for any damage and injury caused to the users.

4) Caution

- Danger of explosion if battery is incorrectly replaced. Replace only with the type recommended by the manufacturer. Observe any warnings specified by the battery manufacturer.
- When disposing of the batteries, please contact your local authorities or dealer and ask for the correct method of disposal.

9. Contact

- Wuxi Wisen Innovation Co., Ltd.: www.wisencn.com
- Email: marketing@wisencn.com